Hanging flat rectangle 2003

FLAT RECTANGLE

Total graphic area: 250”w X 46”h
Total visual area: 240”w X 36”h
Graphic at 50% of actual size

GRAPHIC CODES

FLT-2003-G - Single sided
Single sided flat rectangles have front printed only
Total graphic area: 250”w X 46”h
Total visual area: 240”w X 36”h
This template represents only one side of the structure. Please design each side on an individual template and not as a whole. If artwork is the same on both sides one layout is suitable for printing.

FLT-2003-GDBL - Double sided
Side 1 dimension for flat rectangle
Total graphic area: 250”w X 46”h
Total visual area: 240”w X 36”h
Side 2 dimension for flat rectangle
Total graphic area: 250”w X 46”h
Total visual area: 240”w X 36”h

Please be sure to include the 5” bleed around the perimeter to compensate for the finishing of the graphics. Do not design any critical elements (text, logos, etc.) within 1” of the edge (see dotted lines).

General Artwork Guidelines
- cmyk color mode
- do not embed images, supply them
- resolution must be 100-120 ppi
- all fonts must be created to outlines

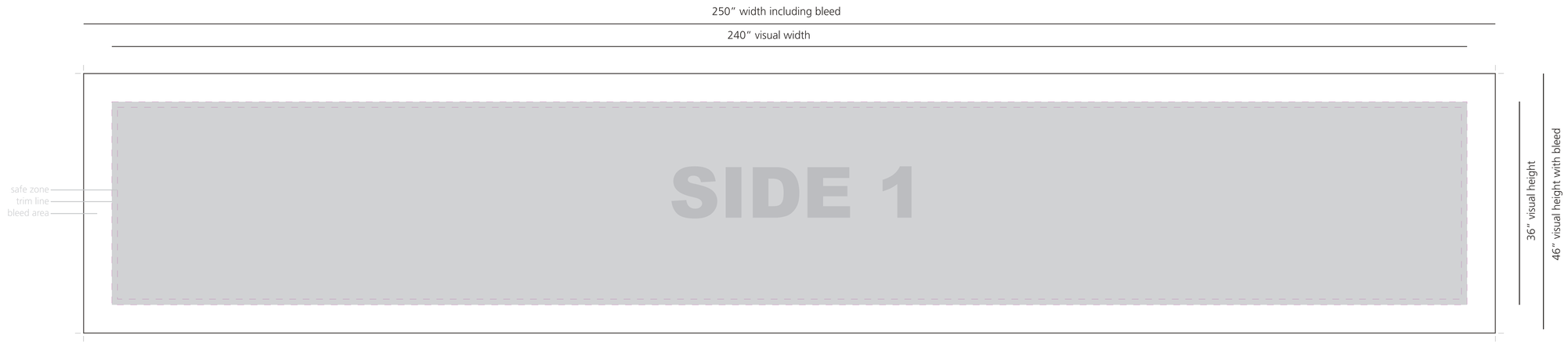

Design Here if ordering FLT-2003-G

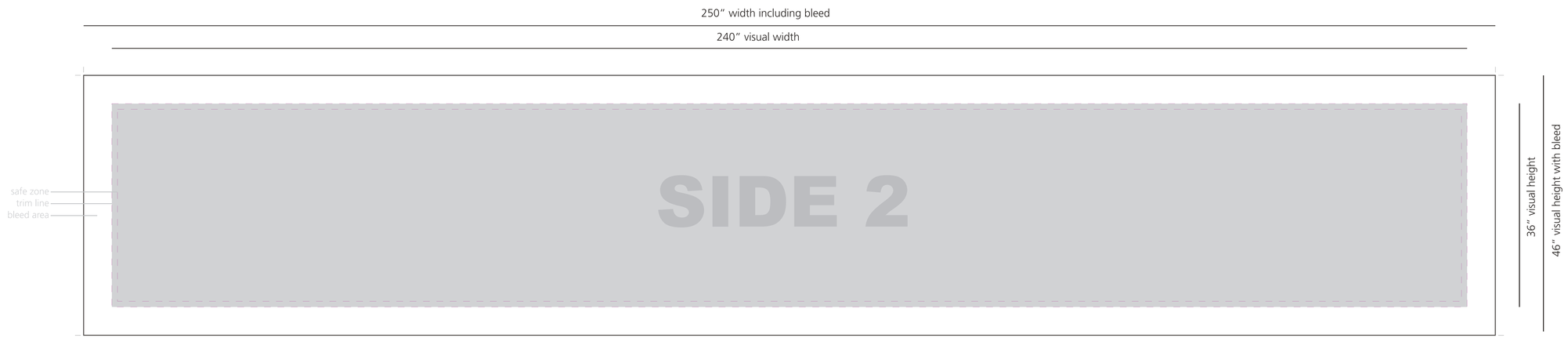
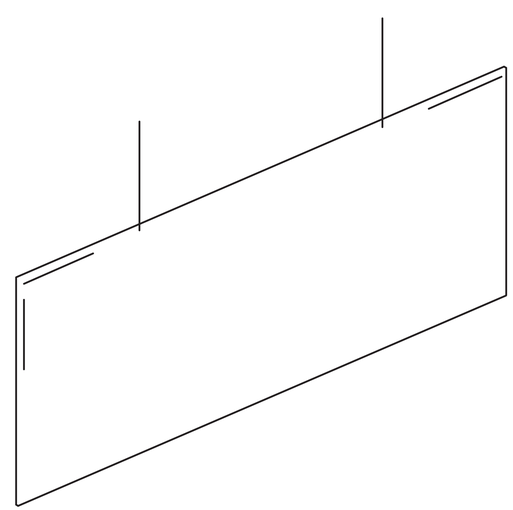
Design Here if ordering FLT-2003-GDBL